EXPRESS 4 CENTRIFUGE
MODEL M510

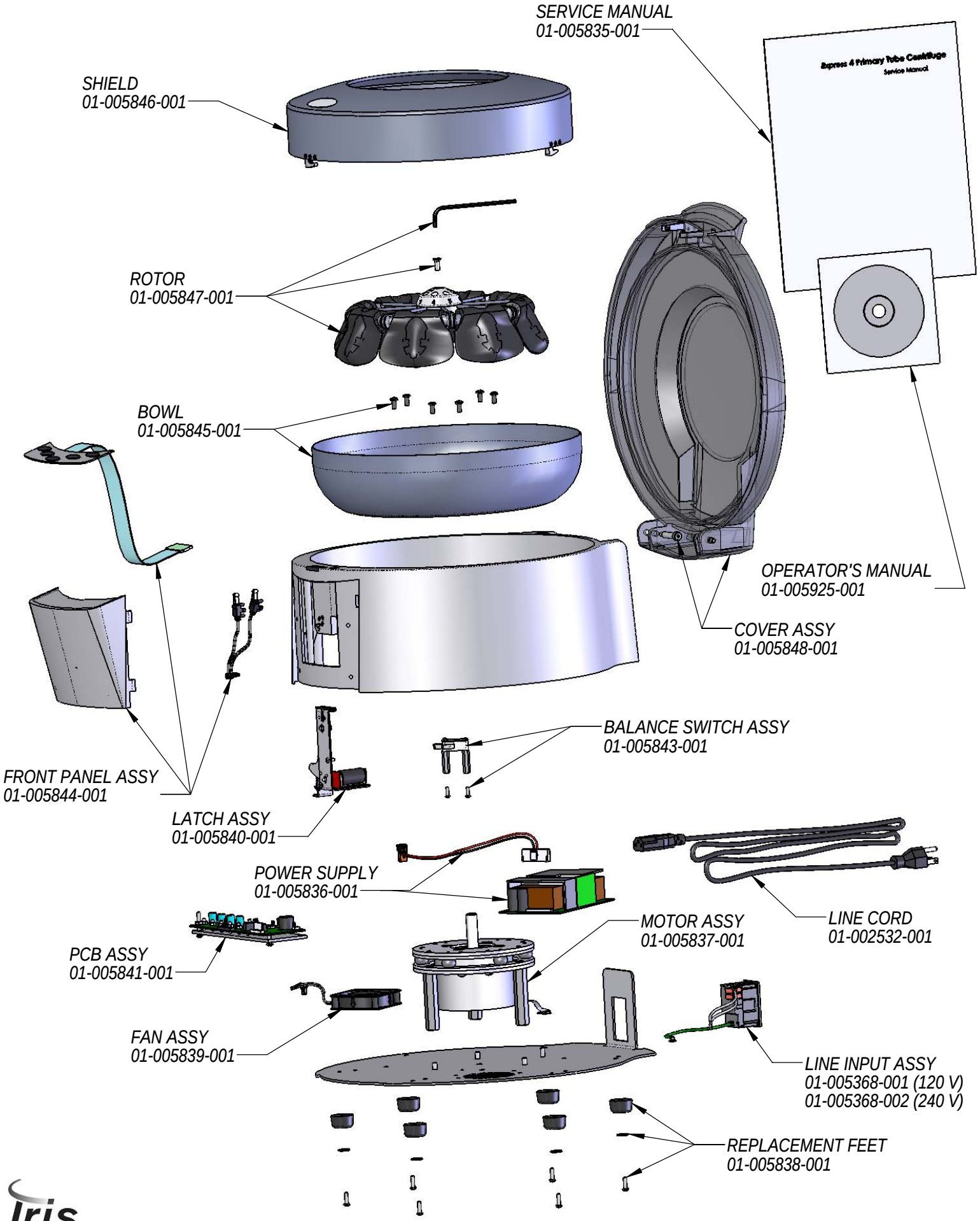

Iris

54-005875-001